PORT OF PORT TOWNSEND
BOAT HAVEN
BOAT RAMP IMPROVEMENT

PORT COMMISSIONERS:
STEPHAN R. TUCKER (DIST. 1)
BRAD A. CLINEFELTER (DIST. 2)
PETER W. HANKE (DIST. 3)

EXECUTIVE DIRECTOR:
LARRY CROCKETT

DEPUTY DIRECTOR:
JIM PIVARNIK

CONSULTANTS:

CIVIL/STRUCTURAL ENGINEERS:
MC SQUARED, INC

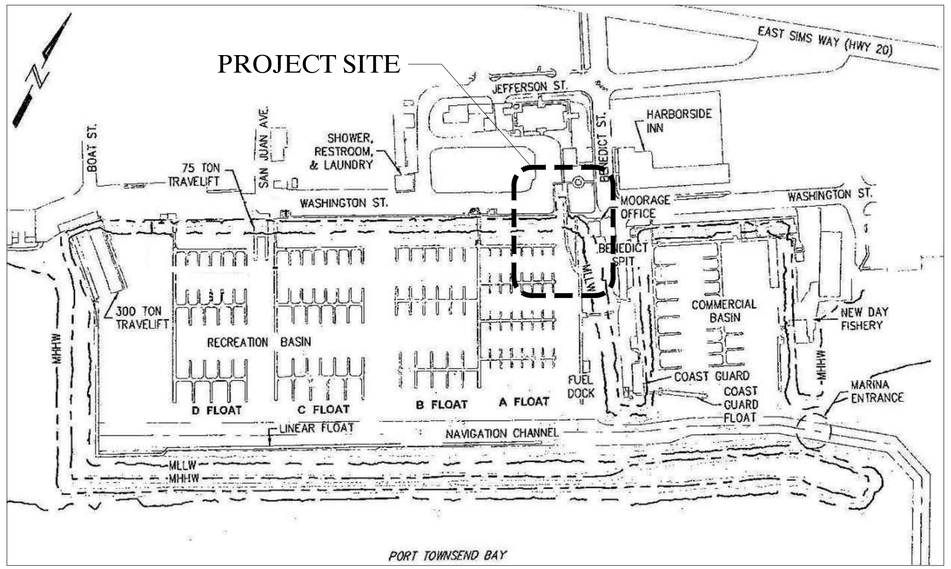

SITE PLAN

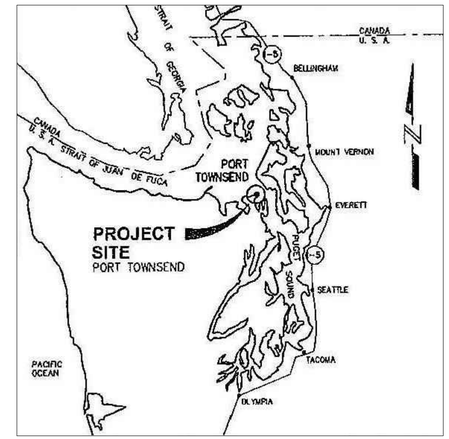

VICINITY MAP

MC SQUARED
INCORPORATED
STRUCTURAL & CIVIL ENGINEERS
1235 EAST 4TH AVE.
SUITE 101
OLYMPIA, WA 98506
T (360) 754-9339
F (360) 352-2044
www.mc2-inc.com

REV	REVISION	DATE
1	ADDENDUM	08-30-11

Sheet Contents: Cover Sheet

Project: Boat Haven Boat Ramp Improvement
Port Of Port Townsend
Port Townsend, WA 98368
For Port Of Port Townsend

Designed By: JTM
Drawn By: MDC/CLH
Checked By: JKF
Date: 05-11-15

JAMES K. FAILE
STATE OF WASHINGTON
47198
PROFESSIONAL ENGINEER
10-02-15

Project Number: 15129

Sheet Number: S0.0
3 of 7

1.0 GENERAL NOTES

THESE STRUCTURAL NOTES SUPPLEMENT THE DRAWINGS. ANY DISCREPANCY FOUND AMONG THE DRAWINGS, THESE NOTES, AND THE SITE CONDITIONS SHALL BE REPORTED TO THE ENGINEER, WHO SHALL CORRECT SUCH DISCREPANCY IN WRITING. ANY WORK DONE BY THE CONTRACTOR AFTER DISCOVERY OF SUCH DISCREPANCY SHALL BE DONE AT THE CONTRACTOR'S RISK. THE CONTRACTOR SHALL VERIFY AND COORDINATE THE DIMENSIONS AMONG ALL DRAWINGS PRIOR TO PROCEEDING WITH ANY WORK OR FABRICATION. THE CONTRACTOR IS RESPONSIBLE FOR ALL BRACING AND SHORING DURING CONSTRUCTION.

1.1 BIDDERS WARRANTY
BY THE ACT OF SUBMITTING A BID FOR THE PROPOSED CONTRACT, THE CONTRACTOR WARRANTS THAT:

A. THE CONTRACTOR AND ALL SUBCONTRACTORS HE INTENDS TO USE HAVE CAREFULLY AND THOROUGHLY REVIEWED THE DRAWINGS AND STRUCTURAL NOTES AND HAVE FOUND THEM COMPLETE AND FREE FROM AMBIGUITIES AND SUFFICIENT FOR THE PURPOSE INTENDED; FURTHER THAT,

B. THE CONTRACTOR HAS CAREFULLY EXAMINED THE SITE OF THE WORK AND THAT FROM HIS OWN INVESTIGATIONS, HE HAS SATISFIED HIMSELF AS TO THE NATURE AND LOCATION OF THE WORK, AS TO THE CHARACTER, QUALITY, QUANTITIES OF MATERIAL AND DIFFICULTIES TO BE ENCOUNTERED, AS TO THE EXTENT OF EQUIPMENT AND OTHER FACILITIES NEEDED FOR THE PERFORMANCE OF THE WORK AND AS TO THE GENERAL AND LOCAL CONDITIONS, AND OTHER ITEMS WHICH MAY IN ANY WAY AFFECT THE WORK OR ITS PERFORMANCE, FURTHER THAT,

C. THE CONTRACTOR AND ALL WORKMEN HE INTENDS TO USE ARE SKILLED AND EXPERIENCED IN THE TYPE OF CONSTRUCTION REPRESENTED BY THE DRAWINGS AND DOCUMENTS BID UPON; FURTHER THAT,

D NEITHER THE CONTRACTOR NOR ANY OF HIS EMPLOYEES, AGENTS, INTENDED SUPPLIERS, OR SUBCONTRACTORS HAVE RELIED UPON ANY VERBAL REPRESENTATIONS ALLEGEDLY AUTHORIZED OR UNAUTHORIZED FROM THE OWNER OR HIS EMPLOYEES OR AGENTS, INCLUDING THE ARCHITECT OR ENGINEERS, IN ASSEMBLING THE BID FIGURES; FURTHER THAT,

E. THE BID FIGURE IS BASED SOLELY UPON THE CONSTRUCTION CONTRACT DOCUMENTS AND PROPERLY ISSUED WRITTEN ADDENDA AND NOT UPON ANY OTHER WRITTEN OR VERBAL REPRESENTATIONS.

1.2 CODES

A. ALL METHODS, MATERIALS AND WORKMANSHIP SHALL CONFORM TO THE 2012 INTERNATIONAL BUILDING CODE (IBC) AS AMENDED AND ADOPTED BY THE LOCAL BUILDING AUTHORITY.

B. ALL REFERENCE TO OTHER CODES, ACI, ASTM ETC., SHALL BE FOR LATEST OR MOST CURRENT EDITION AVAILABLE.

1.3 UNIFORM LOADS:

LOADS	LIVE	DEAD LOAD
PARKING LOT	240 PSF	ACTUAL
SLAB ON GRADE	100 PSF	ACTUAL

(1) WIND: DESIGN SHALL BE IN ACCORDANCE WITH THE 2012 IBC/ ASCE 7-10.

V = 130 MPH (LRFD)
V = 100 MPH (ASD)
EXP. D
RISK CATEGORY II
3 SECOND GUEST

1.4 SOIL DATA
ASSUMED SOIL PROPERTIES:
$\phi = 32^{\circ\circ}$
γ= 124 PCF

ALLOWABLE SOIL PRESSURE OF 1500 PSF (ASSUMED). ALLOW 33-1/3% INCREASE FOR LOADS FROM WIND OR SEISMIC ORIGIN.

1.5 INSPECTION
SPECIAL INSPECTION IS REQUIRED FOR ALL CONCRETE, FIELD WELDING, EPOXYING AND HIGH STRENGTH BOLTING. SPECIAL INSPECTION SHALL BE PAID FOR BY THE PORT OF PORT TOWNSEND.

1.6 SHOP DRAWINGS
THE ENGINEER OF RECORD SHALL REVIEW SHOP DRAWINGS FOR DESIGN INTENT ONLY. THE ENGINEER OF RECORD DOES NOT GUARANTEE DIMENSIONS AND QUANTITIES; THEREFORE, THE GENERAL CONTRACTOR MUST VERIFY THEM. DRAWINGS FOR COMPONENTS DESIGNED PRIMARILY BY OTHERS SHALL BE APPROVED BY THE COMPONENT DESIGNER PRIOR TO CURSORY REVIEW BY THE ENGINEER OF RECORD FOR LOADS IMPOSED ON THE BASIC STRUCTURE. THE COMPONENT DESIGNER IS RESPONSIBLE FOR CODE CONFORMANCE AND ALL NECESSARY CONNECTIONS NOT SPECIFICALLY CALLED OUT ON ARCHITECTURAL OR STRUCTURAL DRAWINGS. SUBMIT A REPRODUCIBLE AND FIVE COPIES OF THE SHOP DRAWINGS TO THE ENGINEER. THE REPRODUCIBLE WILL BE REVIEWED AND RETURNED. ALLOW 10 WORKING DAYS FOR REVIEW. SHOP DRAWINGS SHALL BE SUBMITTED FOR THE FOLLOWING:

A. REINFORCING STEEL
B. STRUCTURAL STEEL

SHOP DRAWINGS MUST BE REVIEWED AND MARKED BY THE CONTRACTOR PRIOR TO SUBMISSION AND REVIEW BY THE ENGINEER OF RECORD.

1.6 CONSTRUCTION TIME FRAME

ALL IN WATER WORK TO BE COMPLETED BY FEBRUARY 15TH 2016.
CONTRACTOR TO PROVIDE CONSTRUCTION SCHEDULE TO PORT OF PORT TOWNSEND FOR APPROXIMATE BOAT RAMP CLOSURES

MISCELLANEOUS

A. VERIFY ALL DIMENSIONS AND CONDITIONS IN THE FIELD.

B. CONSTRUCTION DETAILS NOT SPECIFICALLY SHOWN ON THE DRAWINGS SHALL FOLLOW SIMILAR DETAILS OF SECTIONS OF THIS PROJECT AS APPROVED BY ENGINEER.

2.0 SITE WORK

2.1 EXCAVATION
SEE CIVIL DRAWINGS FOR APPROXIMATE LOCATION OF EXISTING PIPELINES. EXERCISE EXTREME CARE DURING EXCAVATION TO AVOID DAMAGE TO BURIED LINES, TANKS AND OTHER CONCEALED ITEMS. UPON DISCOVERY, DO NOT PROCEED WITH WORK UNTIL RECEIVING WRITTEN INSTRUCTIONS FROM ARCHITECT.

2.2 BACKFILL AND COMPACTION
BACKFILL AGAINST WALLS SHALL NOT BE PLACED UNTIL AFTER THE REMOVAL OF ALL FORMS, SCREEDS, OTHER WOOD DEBRIS AND MATERIAL SUBJECT TO ROT OR CORROSION. USE ONLY MATERIALS APPROVED FOR BACKFILL. IN AREAS UNDER SLABS OR FOOTINGS, MATERIAL OTHER THAN PEA GRAVEL SHOULD BE GRANULAR IN NATURE, PLACED IN 6 INCH LIFTS AND COMPACTED TO AT LEAST 95% OF ITS MAXIMUM DRY DENSITY AS DETERMINED BY AASHTO COMPACTION TEST PROCEDURE T-180. THE FILL SHOULD BE LIMITED TO CLEAN, GRANULAR MATERIAL. PEA GRAVEL FILL WHERE SPECIFIED ON DRAWINGS SHALL HAVE A MAXIMUM PARTICLE SIZE OF 3/8" DIAMETER.

3.0 STRUCTURAL CONCRETE

3.1 GENERAL
ALL CONCRETE SHALL BE HARD ROCK CONCRETE MEETING REQUIREMENTS FOR "ULTIMATE STRENGTH TYPE CONCRETE", PER ACI-301, AND "SPECIFICATIONS FOR STRUCTURAL CONCRETE FOR BUILDINGS". PROPORTIONING OF INGREDIENTS FOR EACH CONCRETE MIX, SHALL BE BY METHOD 2 OR THE ALTERNATE PROCEDURE (306) FOR WINTER CONCRETING AND ACI-605 (305) FOR HOT WEATHER CONCRETING. USE INTERIOR MECHANICAL VIBRATORS WITH 7000-RPM MINIMUM FREQUENCY. DO NOT OVER-VIBRATE. CONCRETE SHALL BE PLACED MONOLITHICALLY BETWEEN CONSTRUCTION OR CONTROL JOINTS. PROTECT ALL FRESHLY PLACED CONCRETE FROM PREMATURE DRYING EXCESSIVE HOT OR COLD TEMPERATURE FOR SEVEN DAYS AFTER POURING. PROVIDE ARCHITECT/ENGINEER WITH PROPOSED CONSTRUCTION OR CONTROL JOINT LOCATIONS FOR THEIR APPROVAL.

3.2 STRENGTH
TWENTY-EIGHT DAY COMPRESSIVE STRENGTHS SHALL BE:

	PSI	SLUMP
SLABS AND ABUTMENTS WITH EPOXY COATED REINFORCEMENT	4000	4" +/- 1"
SLABS AND ABUTMENTS WITH UN-COATED REINFORCEMENT	5000	4" +/- 1"

THESE SLUMPS MAY BE INCREASED IF A PROPER ADDITION OF ADMIXTURE OR ADMIXTURES IS ADDED TO ALLOW HIGHER SLUMP AND GREATER WORKABILITY WITHOUT CHANGING THE WATER CONTENT OF THE ORIGINAL APPROVED MIX DESIGN. ADMIXTURES CONTAINING CHLORIDES ARE NOT PERMITTED UNLESS APPROVED BY THE ENGINEER.

3.3 MATERIALS

A. CEMENT MUST CONFORM TO ASTM 150, TYPE II.

B. COARSE AND FINE AGGREGATE TO CONFORM TO ASTM C33

3.4 CONCRETE MIX DESIGN

A. EXPOSURE CATEGORIES PER ACI-318: F2,S1,W1, AND C2

B. MAXIMUM WATER TO CEMENTITIOUS MATERIALS RATIO = 0.4

C. REQUIRED AIR CONTENT = 7.5%

D. FOR CONCRETE MEMBERS WITH UN-COATED REINFORCEMENT THE MAXIMUM WATER-SOLUBLE CHLORIDE ION CONTENT IN CONCRETE = 0.15 % BY WEIGHT OF CONCRETE.

3.5 WATER REDUCING ADMIXTURES

A. WATER REDUCING ADMIXTURE: MUST CONFORM TO ASTM C494. ADMIXTURES SHALL BE INCORPORATED INTO ALL CONCRETE IN EXACT ACCORDANCE WITH MANUFACTURER'S INSTRUCTIONS.

B. SYNERGIZED PERFORMANCE SYSTEMS: CONCRETE USING ADMIXTURES TO PRODUCE FLOWABLE CONCRETE MAY BE USED WITH ENGINEER'S APPROVAL. DESIGN SHALL BE SUBMITTED TO THE ENGINEER FOR APPROVAL.

C. AIR ENTRAINMENT: CONFORMED TO ASTM C260 AND ASTM C494, ENTRAIN 7.5% BY VOLUME IN ALL EXPOSED CONCRETE.

D. NO OTHER ADMIXTURES PERMITTED UNLESS APPROVED BY THE ENGINEER.

3.6 REINFORCING STEEL
DETAIL, FABRICATE, AND PLACE PER ACI-315 AND ACI-318. SUPPORT REINFORCEMENT WITH APPROVED CHAIRS, SPACERS, OR TIES.

DEFORMED BAR REINFORCEMENT: ASTM A-615-GR 60

DEFORMED BAR STRUCTURAL TIES AND HOOPS: ASTM A-615 GR 60

3.7 FORMWORK AND SHORING

A. FOLLOW RECOMMENDED PRACTICES FOR CONCRETE FORMWORK (ACI-347).

B. ALL SHORING SHALL BE THE RESPONSIBILITY OF THE CONTRACTOR. FORMWORK SUPPORTS AND SHORING SHALL BE DESIGNED TO PROVIDE FINISHED CONCRETE SURFACES AT ALL FACES LEVEL, PLUMB AND TRUE TO THE DIMENSIONS AND ELEVATIONS SHOWN.

3.8 CONCRETE COVER ON REINFORCING (UNLESS SHOWN OTHERWISE)

ALL EXPOSED FACES 3"

3.9 CONSTRUCTION JOINTS
UNLESS NOTED OTHERWISE, LOCATION OF THE CONSTRUCTION OR CONTROL JOINTS IN SLAB ON GRADE SHALL BE COLUMN GRIDS OR UNDER PERMANENT PARTITIONS AND SHALL NOT EXCEED 20' EACH WAY.

4.0 METALS

4.1 STRUCTURAL STEEL

A. METAL PROTECTION: ALL STEEL EXPOSED TO WEATHER, MOISTURE, SOIL, OR AS NOTED SHALL BE GALVANIZED PER ASTM A-123 WITH 1.25 OZ. OF ZINC SPELTER PER SQUARE FOOT OF SURFACE AREA UNLESS NOTED OTHERWISE.

B. ALL SHEET PILE SHAPES SHALL BE PER THE UNITED STATES STEEL SHEET PILING SHAPES HANDBOOK. SHEET PILES SHALL BE ASTM A588 STEEL WITH Fy = 50 KSI, GALVANIZATION IS NOT REQUIRED FOR SHEET PILES.

C. All HSS PIPES SHALL HAVE Fy=50 KSI MINIMUM.

D. ALL STEEL ANGLES SHALL BE ASTM A36 OR BETTER.

.

MC SQUARED
INCORPORATED
STRUCTURAL & CIVIL ENGINEERS
1235 EAST 4TH AVE.
SUITE 101
OLYMPIA, WA 98506
T (360) 754-9339
F (360) 352-2044
www.mc2-inc.com

REV	REVISION	DATE
-	-	-
-	-	-
-	-	-
-	-	-
-	-	-
-	-	-

Sheet Contents
Structural Notes

Project
Boat Haven Boat Ramp Improvement
Port Of Port Townsend
Port Townsend, WA 98368
For Port Of Port Townsend

Designed By	JTM
Drawn By	MDC/CLH
Checked By	JKF
Date	05-11-15

JAMES K. FAILE
STATE OF WASHINGTON
47198
STRUCTURAL ENGINEER
PROFESSIONAL ENGINEER
10-02-15

Project Number
15129

Sheet Number
S0.1
1 of 7

TABLE 1
REQUIRED GEOTECHNICAL SPECIAL INSPECTIONS

SYSTEM or MATERIAL	INSPECTION: IBC CODE REFERENCE	INSPECTION: CODE or STANDARD REFERENCE	FREQUENCY: Continuous	FREQUENCY: Periodic	REMARKS
SOILS					
VERIFY EXCAVATIONS ARE EXTENDED TO PROPER DEPTH AND HAVE REACHED PROPER MATERIAL	TABLE 1705.6			X	
PERFORM CLASSIFICATION AND TESTING OF COMPACTED FILL MATERIALS	TABLE 1705.6 1803.5.1			X	TESTING OF COMPACTED FILL MATERIALS (SEE TABLE 5)
PRIOR TO PLACEMENT OF COMPACTED FILL, OBSERVE SUBGRADE AND VERIFY THAT SITE HAS BEEN PREPARED PROPERLY.	TABLE 1705.6			X	
DRIVEN DEEP FOUNDATION ELEMENTS					
VERIFY ELEMENT MATERIALS, SIZES AND LENGTHS COMPLY WITH THE REQUIREMENTS	TABLE 1705.7		X		
DETERMINE CAPACITIES OF TEST ELEMENTS AND CONDUCT ADDITIONAL LOAD TESTS, AS REQUIRED	TABLE 1705.7		X		
OBSERVE DRIVING OPERATIONS AND MAINTAIN COMPLETE AND ACCURATE RECORDS FOR EACH ELEMENT	TABLE 1705.7		X		
VERIFY PLACEMENT LOCATIONS AND PLUMBNESS, CONFIRM TYPE AND SIZE OF HAMMER, RECORD NUMBER OF BLOWS PER FOOT OF PENETRATION, DETERMINE REQUIRED PENETRATIONS TO ACHIEVE DESIGN CAPACITY, RECORD TIP AND BUTT ELEVATIONS AND DOCUMENT AND DAMAGE TO FOUNDATION ELEMENT	TABLE 1705.7		X		
FOR STEEL ELEMENTS, PERFORM ADDITIONAL INSPECTIONS IN ACCORDANCE WITH SECTION 1705.2	TABLE 1705.7			x	
FOR CONCRETE ELEMENTS AND CONCRETE-FILLED ELEMENTS, PERFORM ADDITIONAL INSPECTIONS IN ACCORDANCE WITH SECTION 1705.3	TABLE 1705.7			x	

TABLE 2
REQUIRED STRUCTURAL SPECIAL INSPECTIONS

SYSTEM or MATERIAL	INSPECTION: IBC CODE REFERENCE	INSPECTION: CODE or STANDARD REFERENCE	FREQUENCY: Continuous	FREQUENCY: Periodic	REMARKS
FABRICATORS					
FABRICATORS	1704.2.5			X	SPECIAL INSPECTION IS REQUIRED FOR STRUCTURAL LOAD-BEARING MEMBERS AND ASSEMBLIES FABRICATED ON THE PREMISES OF A FABRICATOR'S SHOP.
	1704.2.5.1			x	THE SPECIAL INSPECTOR SHALL VERIFY THAT THE FABRICATOR MAINTAINS DETAILED FABRICATION AND QUALITY CONTROL PROCEDURES AND SHALL REVIEW FOR COMPLETENESS AND ADEQUACY RELATIVE TO THE CODE REQUIREMENT.
	1704.2.5.2			x	SPECIAL INSPECTIONS REQUIRED BY SECTION 1705 ARE NOT REQUIRED WHERE THE WORK IS DONE ON THE PREMISES OF A FABRICATOR REGISTERED AND APPROVED TO PERFORM SUCH WORK WITHOUT SPECIAL INSPECTION. APPROVAL SHALL BE BASED UPON REVIEW OF THE FABRICATOR'S WRITTEN PROCEDURAL AND QUALITY CONTROL MANUALS AND PERIODIC AUDITING OF FABRICATION PRACTICES BY A NATIONALLY RECOGNIZED ACCREDITING AUTHORITY. AT COMPLETION OF FABRICATION, THE APPROVED FABRICATOR SHALL SUBMIT A CERTIFICATE OF COMPLIANCE TO THE BUILDING OFFICIAL STATING THAT THE WORK WAS PERFORMED IN ACCORDANCE WITH THE APPROVED CONSTRUCTION DOCUMENTS.
CONCRETE					
REINFORCING STEEL PLACEMENT	1705.3 1910.4 1901.3.2	ACI 318: 3.5 ACI 318: 7.1-7.7		X	TOLERANCES AND REINFORCING PLACEMENT PER ACI 7.5; SPACING LIMITS FOR REINFORCING ACI 7.6 PROTECTION OF REINFORCEMENT PER ACI 7.7
VERIFYING USE OF REQUIRED MIX DESIGN(S)	TABLE 1705.3 1904 1904.2 1910.2 1910.3	ACI 318: CHAPTER 4 ACI 318: 5.2-5.4		X	
CONCRETE PLACEMENT	TABLE 1705.3	ACI 318: 1.3.2.D ACI 318: 5.9 - 5.10	X		
CONCRETE CURING	TABLE 1705.3 1910.9.1-3	ACI 318: 5.11-5.13		X	
VERIFICATION OF FORMWORK	TABLE 1705.3	ACI 318: 6.1.1		X	SPECIAL INSPECTIONS APPLY TO SHAPE, LOCATION AND DIMENSIONS OF THE CONCRETE MEMBER BEING FORMED
STEEL					
FABRICATION OF STRUCTURAL ELEMENTS	1704.2.5.2	AISC 360 N2		X	REFER TO INSPECTION OF FABRICATOR REQUIREMENTS APPROVAL BASED ON NATIONALLY RECOGNIZED ACCREDITING AUTHORITY
MATERIAL VERIFICATION OF STRUCTURAL STEEL	1705.2.1 2203.1 TABLE 1705.2	ASTM A6 ASTM STANDARDS SPECIFIED IN CONSTRUCTION DOCUMENTS AISC 360 N3.2 AISC 360 A3.1 AISC 360 M5.5		X	CERTIFIED MILL TEST REPORTS

TABLE 3
REQUIRED INSPECTIONS for SPECIAL CASES

SYSTEM or MATERIAL	INSPECTION: IBC CODE REFERENCE	INSPECTION: CODE or STANDARD REFERENCE	FREQUENCY: Continuous	FREQUENCY: Periodic	REMARKS
PRE-ENGINEERED STRUCTURES					
FABRICATION AND ERECTION	1705.1.1		X	X	REFER TO TABLE 2 OF THIS PLAN FOR FABRICATOR, WELDING, AND HIGH STRENGTH BOLTING SPECIAL INSPECTION REQUIREMENTS

TABLE 4
REQUIRED TESTING for SPECIAL INSPECTIONS

SYSTEM or MATERIAL	TESTING: IBC CODE REFERENCE	TESTING: CODE or STANDARD REFERENCE	FREQUENCY: Continuous	FREQUENCY: Periodic	REMARKS
CONCRETE					
AT THE TIME FRESH CONCRETE IS SAMPLED TO FABRICATE SPECIMENS FOR STRENGTH TESTS, PERFORM SLUMP AND AIR CONTENT TESTS, AND DETERMINE THE TEMPERATURE OF THE CONCRETE	TABLE 1705.3	ASTM C 172 ASTM C 31 ACI 318: 5.6, 5.8	X		FABRICATE SPECIMENS AT TIME FRESH CONCRETE IS PLACED ONCE EACH DAY FOR A GIVEN CLASS OF CONCRETE, OR LESS THAN ONCE FOR EACH 150 YDS OF CONCRETE, OR LESS THAN ONCE FOR EACH 5,000 FT2 OF SURFACE AREA FOR SLABS/WALLS. ONCE EACH SHIFT FROM IN-PLACE WORK OR FROM TEST PANEL AND MINIMUM ONE SPECIMEN FOR EACH 50
CONCRETE STRENGTH	TABLE 1705.3	ASTM C39	X		
CONCRETE SLUMP	TABLE 1705.3	ASTM C143	X		
CONCRETE AIR CONTENT		ASTM C231	X		
CONCRETE TEMPERATURE		ASTM C1064	X		

TABLE 5
STRUCTURAL OBSERVATION

SYSTEM or MATERIAL	INSPECTION: IBC CODE REFERENCE	INSPECTION: CODE or STANDARD REFERENCE	FREQUENCY: Continuous	FREQUENCY: Periodic	REMARKS
AS REQUIRED BY THE BUILDING OFFICIAL	1704.5				

MC SQUARED INCORPORATED
STRUCTURAL & CIVIL ENGINEERS
1235 EAST 4TH AVE.
SUITE 101
OLYMPIA, WA 98506
T (360) 754-9339
F (360) 352-2044
www.mc2-inc.com

REV	REVISION	DATE
-	-	-

Sheet Contents
Special Inspections

Project
Boat Haven Boat Ramp Improvement
Port Of Port Townsend
Port Townsend, WA 98368
For Port Of Port Townsend

Designed By JTM
Drawn By MDC/CLH
Checked By JKF
Date 05-11-15

JAMES K. FARLEY — STATE OF WASHINGTON — 47198 — STRUCTURAL ENGINEER — PROFESSIONAL ENGINEER
10-02-15

Project Number 15129

Sheet Number S0.2

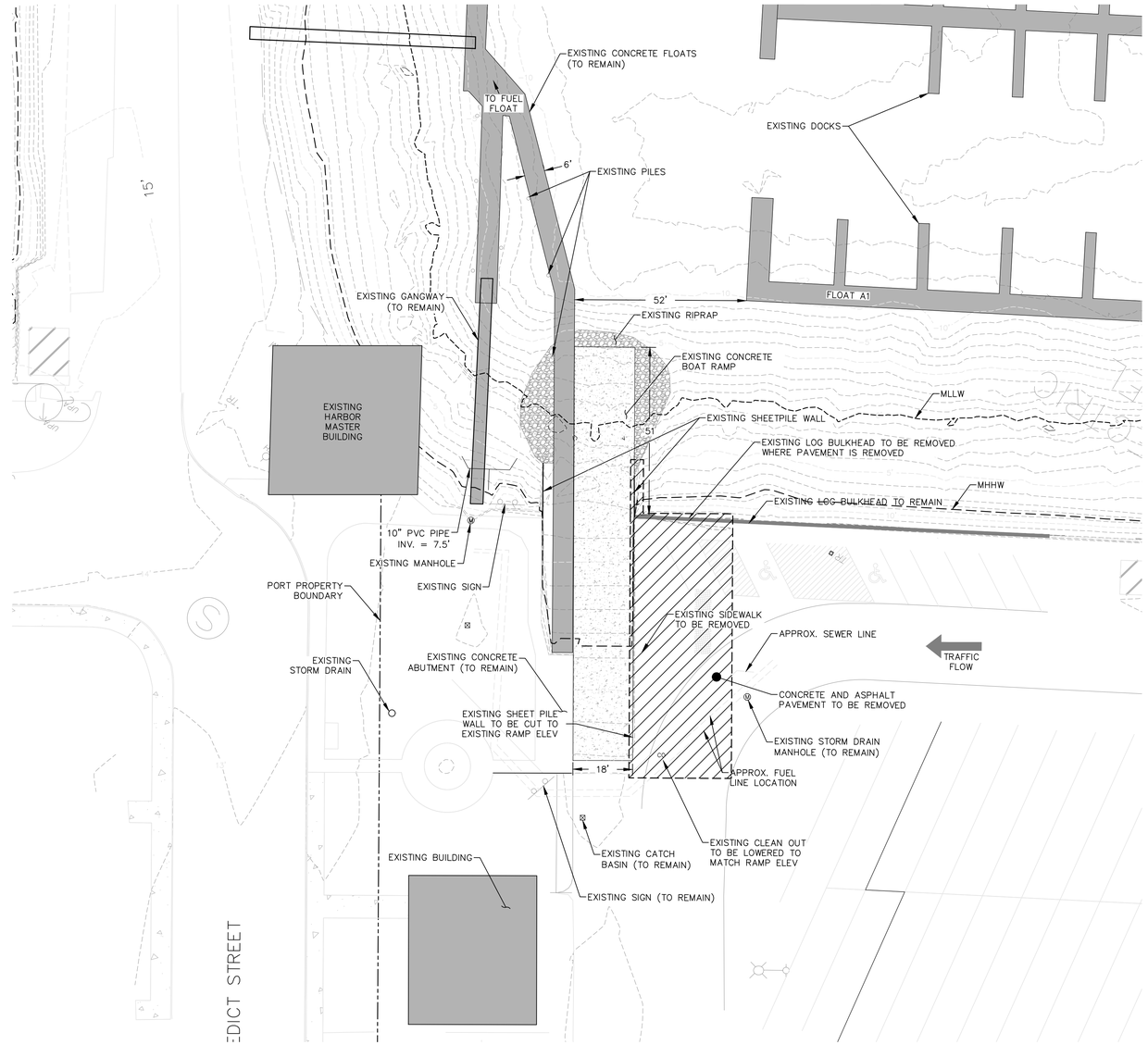

DEMOLITION PLAN

1"=20'

N

SCALE: 1"=20 FEET

0 10 20 40

MC SQUARED INCORPORATED
STRUCTURAL & CIVIL ENGINEERS
1235 EAST 4TH AVE.
SUITE 101
OLYMPIA, WA 98506
T (360) 754-9339
F (360) 352-2044
www.mc2-inc.com

REV	REVISION	DATE

Sheet Contents
Demolition Plan

Project
Boat Haven Boat Ramp Improvement
Port Of Port Townsend
Port Townsend, WA 98368
For Port Of Port Townsend

Designed By	JTM
Drawn By	MDC/CLH
Checked By	JKF
Date	05-11-15

JAMES K. FARLEY
STATE OF WASHINGTON
47198
CIVIL ENGINEER
PROFESSIONAL ENGINEER
10-02-15

Project Number
15129

Sheet Number
S1.0

REQUIRED CONSTRUCTION SEQUENCING:

1. INSTALL TEMPORARY SUPPORT OF EXISTING WOOD BULKHEAD PER CONTRACTOR.
2. REMOVE LOG BULKHEAD BETWEEN EXISTING BOAT RAMP AND LOCATION OF NEW SHEET PILE WALL.
3. SAW CUT AND REMOVE ASPHALT AT NEW SHEET PILE WALL LOCATION.
4. INSTALL NEW SHEET PILE WALL AND PILE CAP.
5. PROVIDE CONNECTION OF EXISTING WOOD BULKHEAD TO NEW SHEET PILE WALL PER DETAIL 11/S4.0. REMOVE TEMPORARY SUPPORT OF EXISTING WOOD BULKHEAD.
6. PATCH PARKING LOT BEHIND NEW SHEET PILE WALL.
7. RE-LOCATE EXISTING GUARDRAIL TO CAP OF NEW SHEET PILE WALL.
8. CUT EXISTING SHEET PILE WALL TO MATCH ELEVATION OF NEW RAMP.
9. CAST NEW CONCRETE ABUTMENT.
10. DRIVE GUIDE PILES FOR NEW PRE-MANUFACTURED FLOAT.
11. POUR NEW CAST IN PLACE SLAB AT NEW BOAT RAMP.
12. PLACE CAST IN PLACE CONCRETE PLANKS AT NEW BOAT RAMP.
13. USE CABLE RESTRAINT OR COIL BOLT RESTRAINTS TO TIE PRECAST SLAB SECTIONS TOGETHER.
14. PLACE "BOULDER POCKET" AT END OF NEW AND EXISTING RAMPS
15. PLACE NEW RIPRAP.
16. INSTALL NEW PRE-MANUFACTURED FLOAT.

NOTE: WORK TO BE COMPLETED BY FEBRUARY 15th 2016

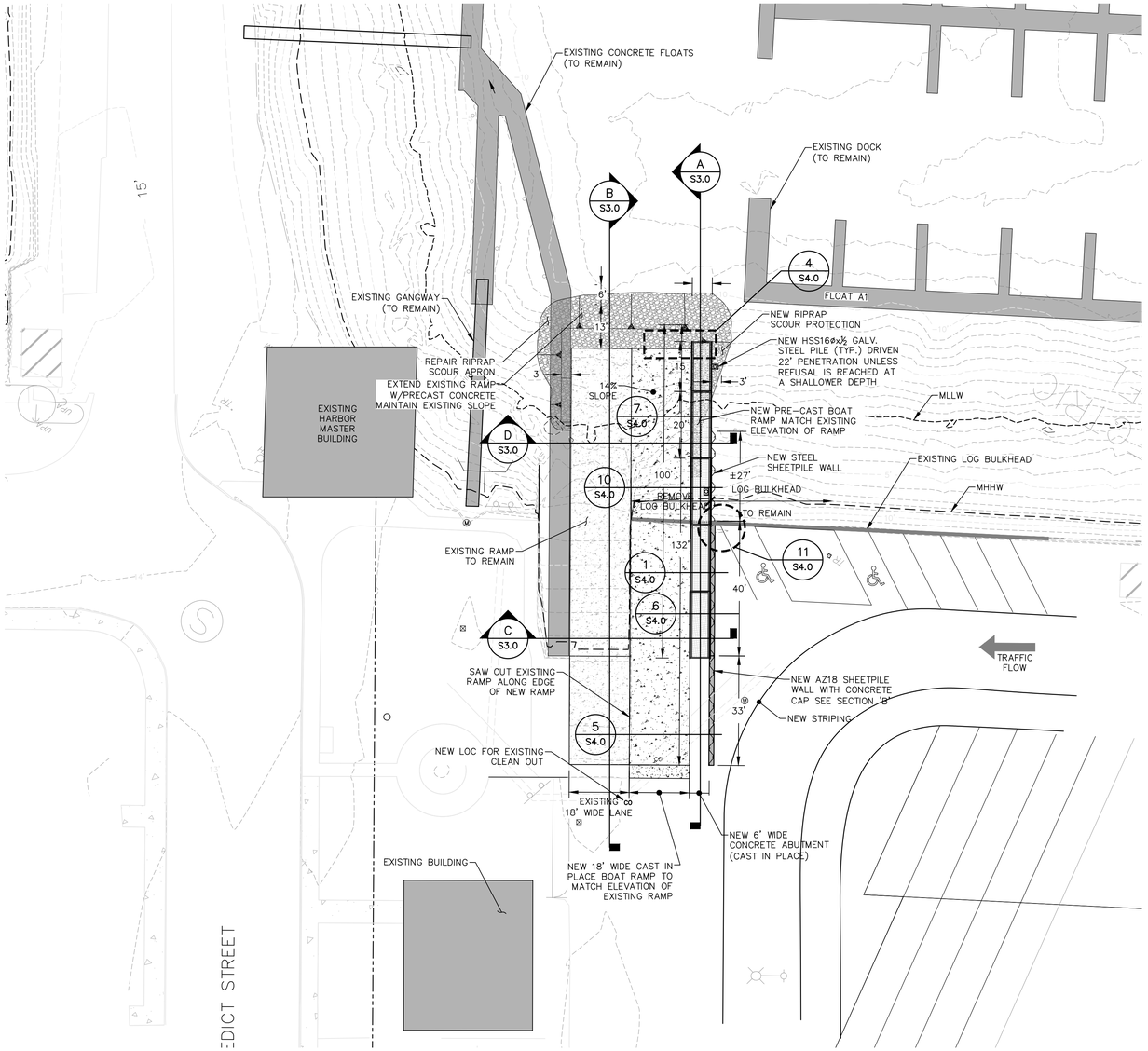

LAYOUT PLAN

1"=20'

MC SQUARED INCORPORATED
STRUCTURAL & CIVIL ENGINEERS
1235 EAST 4TH AVE.
SUITE 101
OLYMPIA, WA 98506
T (360) 754-9339
F (360) 352-2044
www.mc2-inc.com

REV	REVISION	DATE

Sheet Contents
Layout Plan

Project
Boat Haven Boat Ramp Improvement
Port Of Port Townsend
Port Townsend, WA 98368
For Port Of Port Townsend

Designed By	JTM
Drawn By	MDC/CLH
Checked By	JKF
Date	05-11-15

JAMES K. FARLEY
STATE OF WASHINGTON
47198
STRUCTURAL ENGINEER
PROFESSIONAL ENGINEER
10-02-15

Project Number
15129

Sheet Number
S2.0
5 of 7

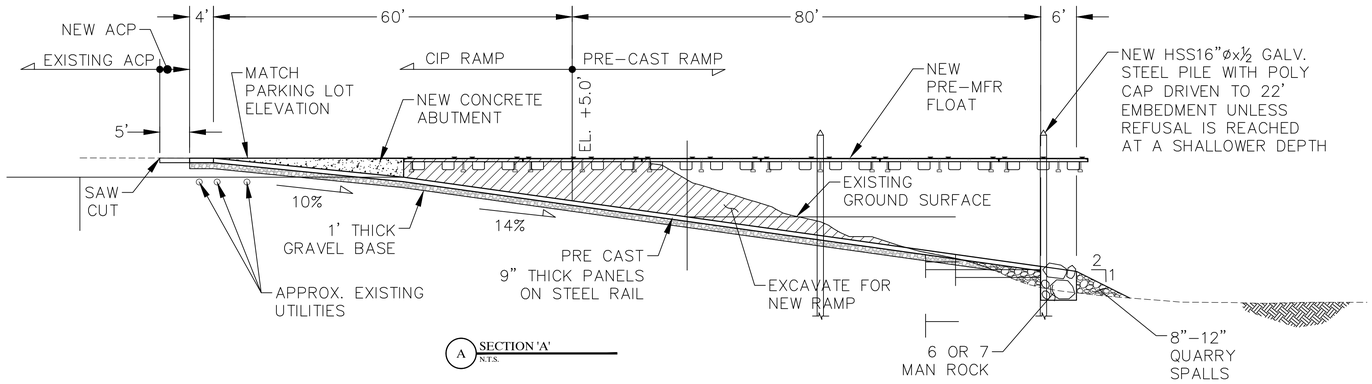

A SECTION 'A'
N.T.S.

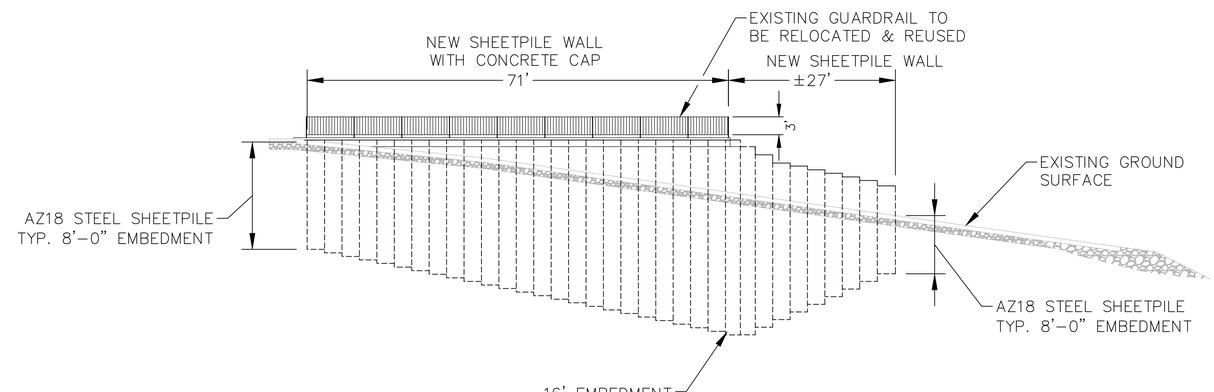

B SECTION 'B'
N.T.S.

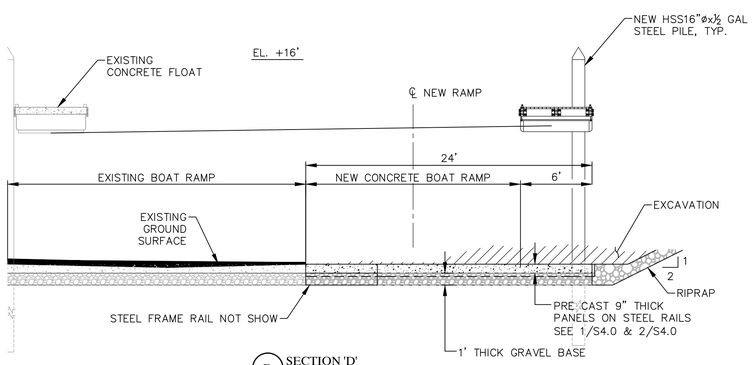

D SECTION 'D'
N.T.S.

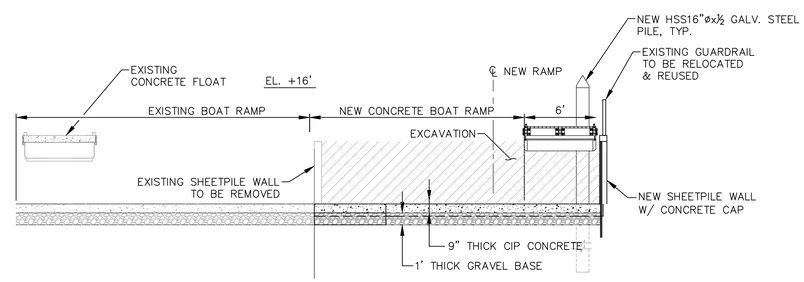

C SECTION 'C'
N.T.S.

MC²
MC SQUARED
INCORPORATED
STRUCTURAL & CIVIL ENGINEERS
1235 EAST 4TH AVE.
SUITE 101
OLYMPIA, WA 98506
T (360) 754-9339
F (360) 352-2044
www.mc2-inc.com

REV	REVISION	DATE
-	-	-
-	-	-
-	-	-
-	-	-
-	-	-

Sheet Contents
Sections & Details

Project
Boat Haven Boat Ramp Improvement
Port Of Port Townsend
Port Townsend, WA 98368
For Port Of Port Townsend

Designed By	JTM
Drawn By	MDC/CLH
Checked By	JKF
Date	05-11-15

10-02-15

Project Number
15129

Sheet Number
S3.0

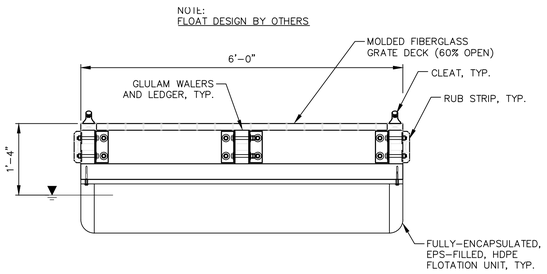

7 NEW PRE-MFR FLOAT SECTION PROVIDED BY PORT
N.T.S.

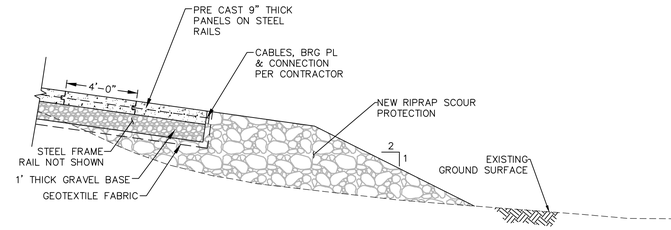

4 RAMP END DETAIL
N.T.S.

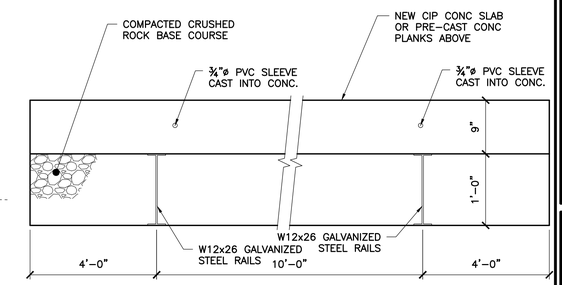

1 SECTION AT NEW RAMP
1" = 1'-0"

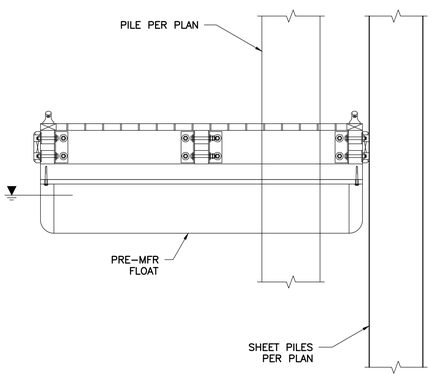

10 FLOAT GUIDES ON SHEET PILES
3/4" = 1'-0"

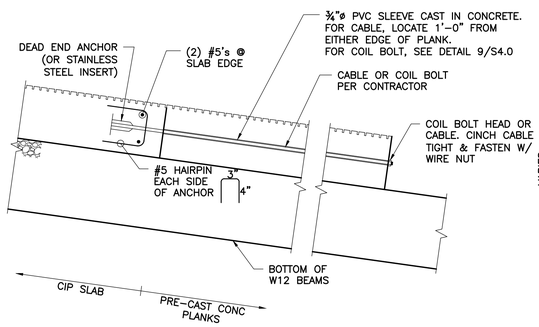

8 CIP SLAB TO PRE CAST PLANK CONNECTION
1" = 1'-0"

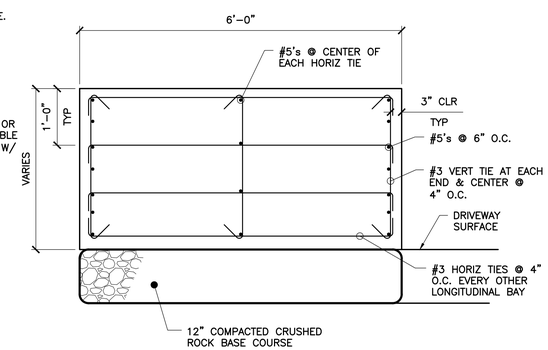

5 ABUTMENT SECTION
3/4" = 1'-0"

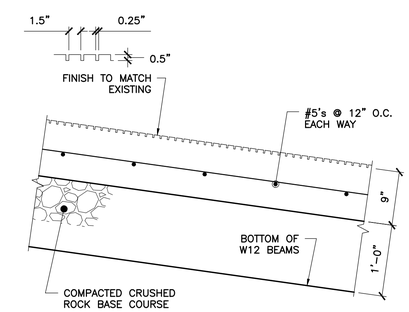

2 CAST IN PLACE SLAB ON GRADE
1" = 1'-0"

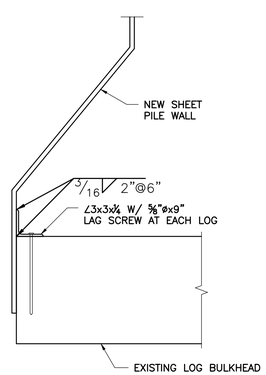

11 EXISTING BULKHEAD TO NEW SHEET PILE WALL
1 1/2" = 1'-0"

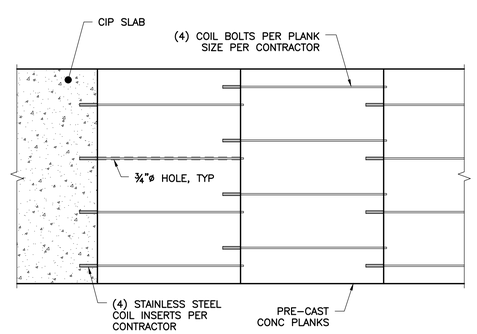

NOTE:
STAGGER INSERTS & COIL BOLTS, CENTER BOLTS IN SLAB

9 COIL BOLT PLANK CONNECTION - PLAN VIEW
1/2" = 1'-0"

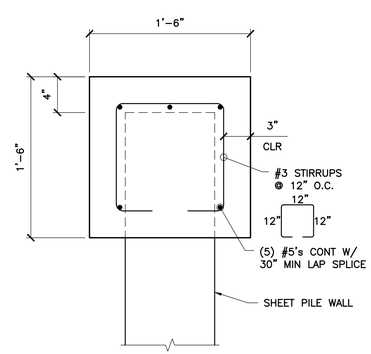

6 TYPICAL SHEET PILE WALL CAP SECTION
1 1/2" = 1'-0"

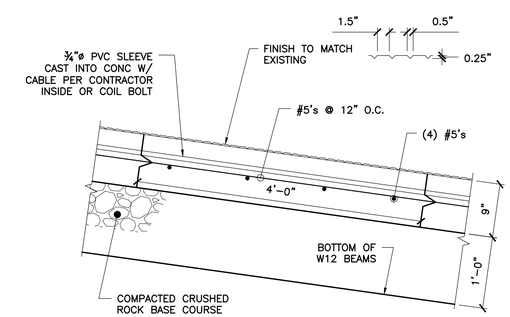

3 CAST IN PLACE SLAB ON GRADE
1" = 1'-0"

MC²
MC SQUARED
INCORPORATED
STRUCTURAL & CIVIL ENGINEERS
1235 EAST 4TH AVE.
SUITE 101
OLYMPIA, WA 98506
T (360) 754-9339
F (360) 352-2044
www.mc2-inc.com

REV	REVISION	DATE

Sheet Contents
Details

Project
Boat Haven Boat Ramp Improvement
Port Of Port Townsend
Port Townsend, WA 98368
For Port Of Port Townsend

Designed By JTM
Drawn By MDC/CLH
Checked By JKF
Date 05-11-15

JAMES K. FARLEY
STATE OF WASHINGTON
47198
PROFESSIONAL ENGINEER
10-02-15

Project Number
15129

Sheet Number
S4.0
7 of 7